Geco

The PURALUCE GECO is a wall, ceiling, floor or ground mounted directional spot luminaire. It is constructed of anidized aluminum. Suitable for indoor and outdoor lighting applications, there are three standard finishes and four beam distributions of 22, 36, 55 and 73 degrees. Available in color temperatures 2700K, 3000K and 4000K, the Geco operates on 24VDC or constant current and is available in 14W and 25W.

Standard Finishes
grey painted
natural copper
corten

Grey Painted

Natural Copper

Corten

JOB:	TYPE:	QUANTITY:

NOTES:

Some of our custom color options. Fixtures can be customized to any RAL color.

Technical Data

Input
24VDC or 500mA / 700mA

Wattage
14W / 25W

Color Temperatures
2700°K (WW), 3000°K (W), 4000°K (N)
2 step MacAdam ellipse binning

CRI / R9
92 / 84

Lumens
14W - 950 lm (W), 1155 lm (NW)
25W - 2200 lm (W), 2350 lm (NW)

Optics
22°, 36°, 55°, 73°

Dimensions

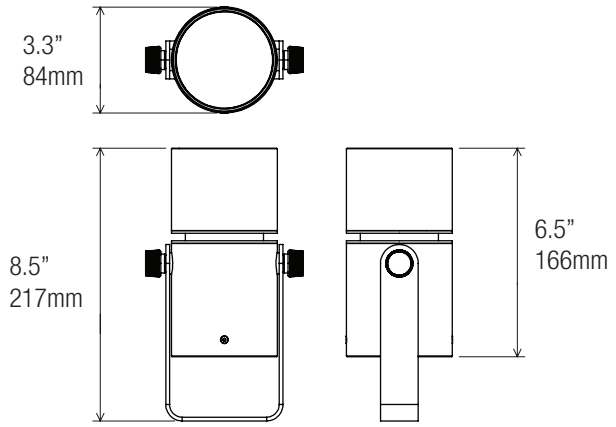

Accessories

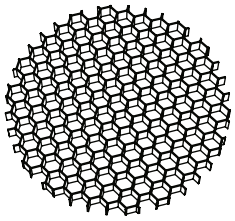

Honeycomb filter

Mounting

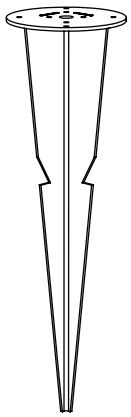

Spike

Mounting

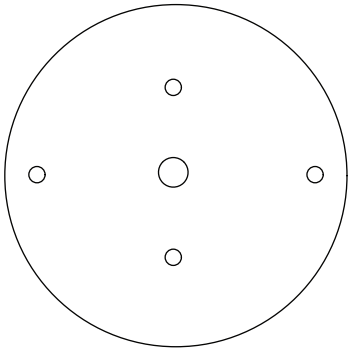

J-box plate

Order Code:

Code	Wattage	Input	CRI & CCT	Optic	Finish	Accessory (optional)	Mounting (optional)
GEC -	____ -	____ -	____ -	____ -	____ -	____ -	____
	14W = 14W **25W** = 25W	**24VDC** = 24VDC **CC** = Constant Current	**927** = 90 CRI, 2700°K **930** = 90 CRI, 3000°K **940** = 90 CRI, 4000°K	**22** = 22° **36** = 36° **55** = 55° **73** = 73°	**GY** = Grey **NC** = Natural Copper **CT** = Corten **XX** = Custom	**HCF** = Honeycomb Filter	**SPK** = Spike **JBP** = J-box plate

Photometric Data

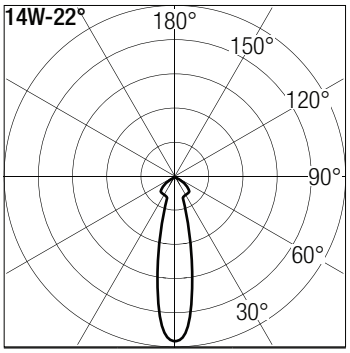

h (m)	E (lx)	D (m)
1	8613	38
1,5	4037	58
2	2176	77
2,5	1413	97
3	982	116

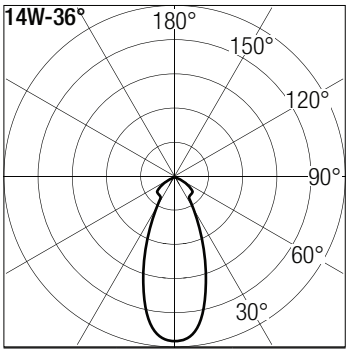

h (m)	E (lx)	D (m)
1	3014	65
1,5	1371	97
2	757	130
2,5	513	162
3	356	195

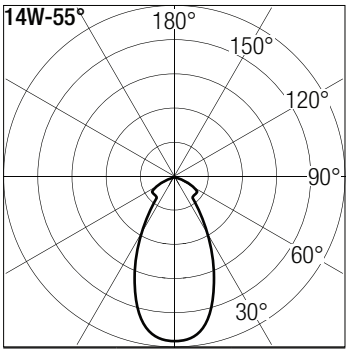

h (m)	E (lx)	D (m)
1	1545	104
1,5	621	156
2	366	208
2,5	243	260
3	175	312

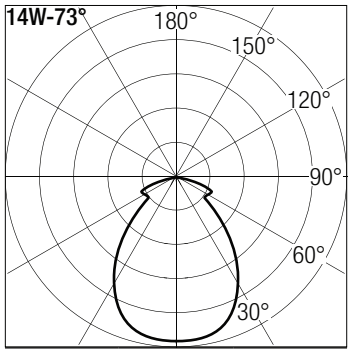

h (m)	E (lx)	D (m)
1	865	148
1,5	416	221
2	238	296
2,5	164	369
3	119	443

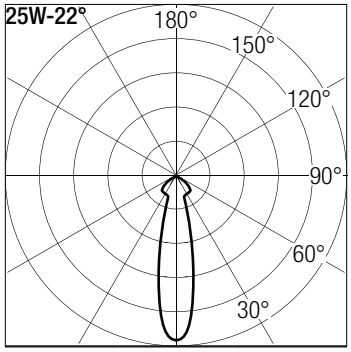

h (m)	E (lx)	D (m)
1	15640	38
1,5	7210	58
2	4390	77
2,5	2530	97
3	1820	116

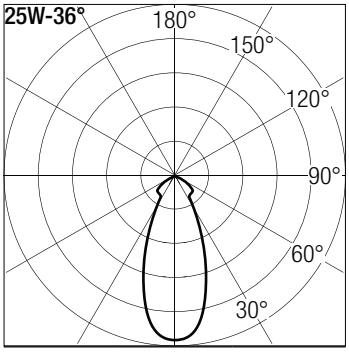

h (m)	E (lx)	D (m)
1	5685	65
1,5	2575	97
2	1436	130
2,5	953	162
3	676	195

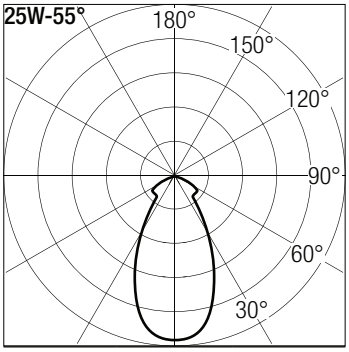

h (m)	E (lx)	D (m)
1	2683	104
1,5	1232	156
2	684	208
2,5	455	260
3	333	312

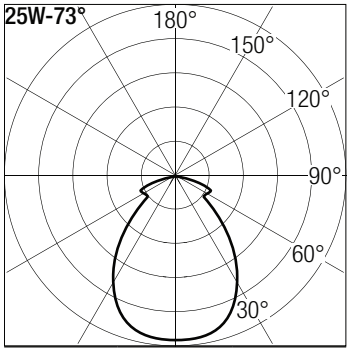

h (m)	E (lx)	D (m)
1	1563	148
1,5	793	221
2	455	296
2,5	305	369
3	226	443

Drivers

Constant Current Universal 0.1% Dimmable (120V-277V / TRIAC/ELV/0-10V)

DR-25W700MA-DIME-UNV - 1 piece

24VDC Universal 5% Dimmable (120V-277V / TRIAC/ELV/0-10V)

DR-30W24VDC-DIMS-UNV - 1 piece